Online data sheet





S30A-7021EK

S3000 Anti Collision

SAFETY LASER SCANNERS

SICK
Sensor Intelligence.



system plug not supplied with delivery

Ordering information

Type	Part no.
S30A-7021EK	1071544

Usage

Can only be used in the EFI system network, e.g., with a Flexi Soft safety controller

The system plug has to be ordered separately. For details, see “Accessories”.

Other models and accessories ➜ www.sick.com/S3000_Anti_Collision

Detailed technical data

Features

Usage	Can only be used in the EFI system network, e.g., with a Flexi Soft safety controller
Protective field range	7 m
Collision protection field range	15 m (on reference target) [1]
Distance measuring range	49 m
Number of simultaneously monitored protective fields	2 [1]
Type of field set	Triple field sets, dual field sets
Number of field sets	16 [2]
Number of fields	32
Number of monitoring cases	32
Scanning angle	190°
Resolution (can be configured)	30 mm, 40 mm, 50 mm, 70 mm, 150 mm
Angular resolution	0.25°
Response time	120 ms [3]
Protective field supplement	100 mm
Number of multiple samplings	2 ... 16, configurable
Delay of automatic reset	2 s ... 60 s, configurable

[1] The shut-off signals must be connected to safe outputs on a Flexi Soft safety controller or routed via a safe EFI gateway.

[2] In dual field mode 16, in triple field mode 10 field sets.

[3] Depending on basic response time and multiple sampling.

Safety-related parameters

Type	Type 3 (IEC 61496)
Safety integrity level	SIL2 (IEC 61508) SILCL2 (EN 62061)
Category	Category 3 (EN ISO 13849)
Performance level	PL d (EN ISO 13849)

PFH_D (mean probability of a dangerous failure per hour)	8.0×10^{-8} (EN ISO 13849)
T_M (mission time)	20 years (EN ISO 13849)
Safe state in the event of a fault	At least one OSSD is in the OFF state.

Functions

Restart interlock	✓
External device monitoring (EDM)	✓
Multiple sampling	✓
Monitoring case switching	✓
Simultaneous monitoring	✓
Static protective field switching	✓
Dynamic protective field switching	✓
Integrated configuration memory	✓
Measured data output	✓, Expanded (CMS), via RS-422
Safe SICK device communication via EFI	✓

Interfaces

Connection type	System plug with or without connecting cable
Inputs	
External device monitoring (EDM)	1
Reset/restart	1
Static control inputs with EFI	5 [1]
Outputs	
OSSD pairs	1
Diagnostic outputs	3 [2]
Configuration method	PC with CDS (Configuration and Diagnostic Software)
Configuration and diagnostics interface	RS-232
Transmission rate	9.6 kBaud, 19.2 kBaud, 38.4 kBaud
Data interface	RS-422
Transmission rate	≤ 500 kBaud
Safe SICK device communication via EFI	
Transmission rate	≤ 500 kBaud
Length of cable	≤ 50 m
Conductor cross-section	0.34 mm²
Fieldbus, industrial network	
Integration via EFI gateways	PROFIBUS PROFIsafe, PROFINET PROFIsafe [3]

[1] Can only be used in the EFI system network, e.g., with a Flexi Soft safety controller.
[2] Freely programmable, e.g. warning field, contamination, reset required.
[3] For a suitable EFI-gateway see modules and gateways in the accessory section of connection systems.

Electrical data

Protection class	II (EN 50178)
Supply voltage V_s	24 V DC (16.8 V DC ... 28.8 V DC)
Power consumption	≤ 0.8 A [1] ≤ 2.3 A [2]
Outputs	
Output signal switching devices (OSSDs)	2 x 500 mA
Diagnostic outputs	3 x 100 mA [3]

[1] At 24 V DC without output load.
[2] At 24 V DC including maximum output load.
[3] Freely programmable, e.g. warning field, contamination, reset required.

Mechanical data

Dimensions (W x H x D)	155 mm x 185 mm x 160 mm
Weight	3.3 kg
Housing material	Aluminum die cast
Housing color	RAL 1021 (yellow)
Front screen material	Polycarbonate
Front screen surface finish	Outside with scratch-resistant coating

Ambient data

Enclosure rating	IP65 (EN 60529)
Ambient operating temperature	–10 °C ... +50 °C
Storage temperature	–25 °C ... +50 °C
Vibration resistance	5 g, 10 Hz ... 150 Hz (IEC 61496, IEC 61496-3)
Shock resistance	
Continuous shock	10 g, 16 ms (IEC 61496, IEC 61496-3)

Other information

Type of light	Pulsed laser diode
Wave length	905 nm
Detectable remission	1.8 % ... > 1,000 %, reflectors
Laser class	1 (21 CFR 1040.10 and 1040.11, IEC 60825-1)

Classifications

ECl@ss 5.0	27272705
ECl@ss 5.1.4	27272705
ECl@ss 6.0	27272705
ECl@ss 6.2	27272705
ECl@ss 7.0	27272705
ECl@ss 8.0	27272705
ECl@ss 8.1	27272705
ECl@ss 9.0	27272705
ETIM 5.0	EC002550
ETIM 6.0	EC002550

UNSPSC 16.0901	39121528

Dimensional drawing (Dimensions in mm (inch))

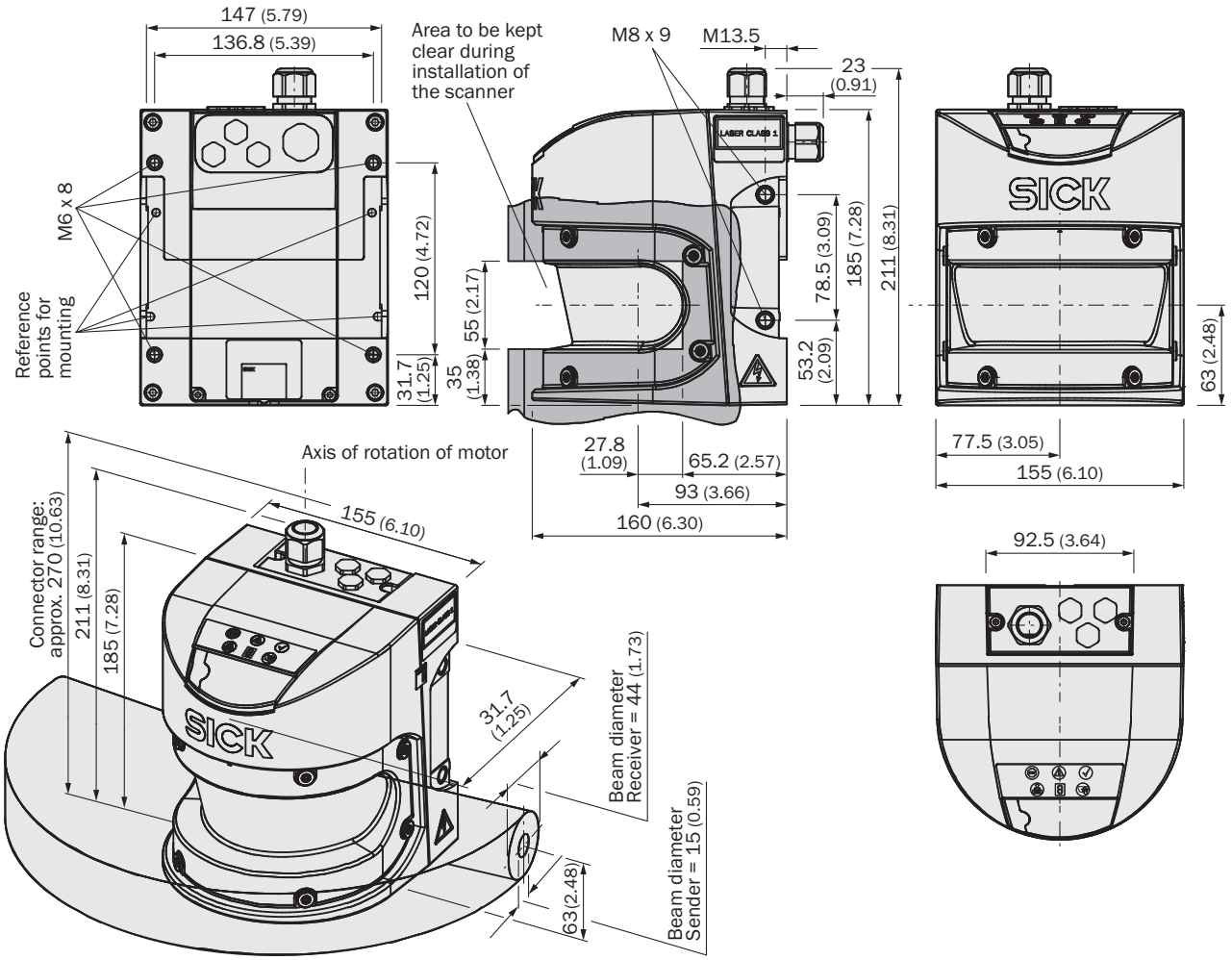

Connection diagram

Host-Guest network with two S3000 Anti Collision and Flexi Soft modular safety controller with Flexi Soft Drive Monitor

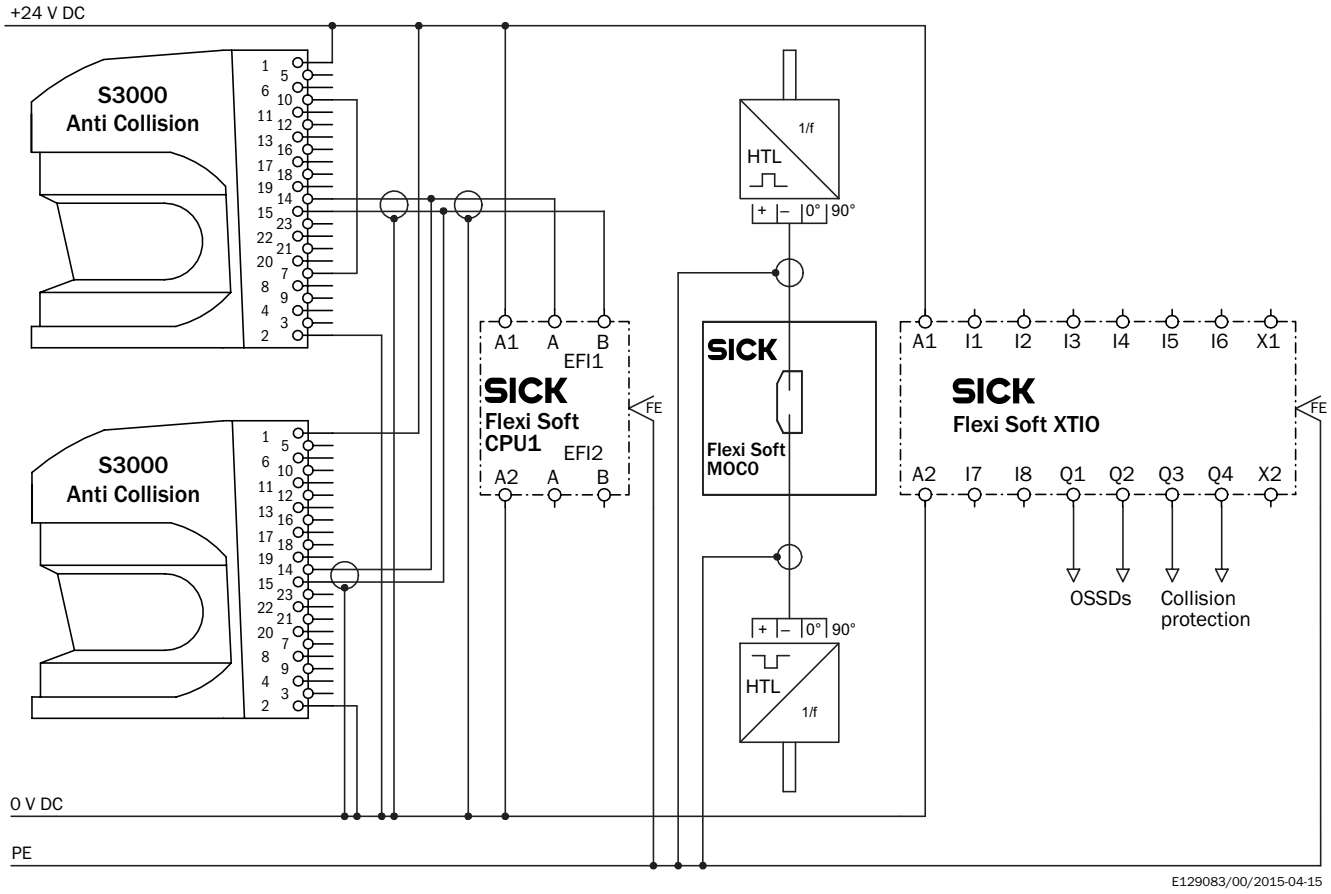

Host-Guest network with two S3000 Anti Collision and Flexi Soft modular safety controller

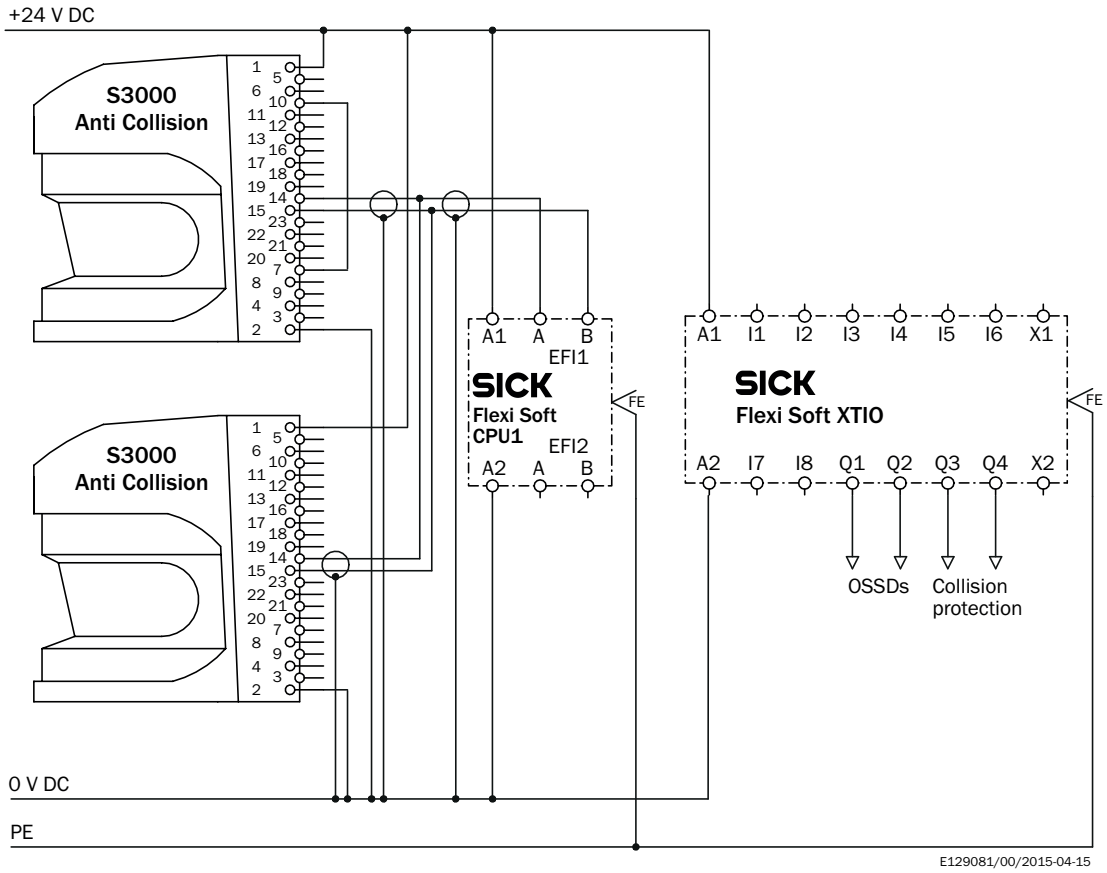

Recommended accessories

Other models and accessories ➜ www.sick.com/S3000_Anti_Collision

	Brief description	Further accessories	Type	Part no.
Mounting brackets and plates				
	1 piece, Visor for heavy duty mounting kit (2080350), steel, painted (RAL 1021)		Heavy duty sight	2083733
	1 piece, Mounting bracket, heavy-duty version, with protection cover, for floor mounting, adjustable longitudinal and lateral axes via alignment plate, height adjustment possible. Tilt angle ± 5°. Additional mounting brackets are not required., steel, painted (RAL 1021)		Heavy-duty mounting kit	2080350
	1 piece, mounting bracket for direct mounting, from the rear, on wall or machine, not adjustable		Mounting kit 1	2015623

	Brief description	Further accessories	Type	Part no.
	1 piece, mounting bracket for rear mounting on wall or machine, adjustable longitudinal and lateral axes, only in conjunction with mounting kit 1 (2015623)		Mounting kit 2	2015624
	1 piece, mounting bracket for rear mounting on wall, floor, or machine, adjustable longitudinal and lateral axes, only in conjunction with mounting kit 1 (2015623) and 2 (2015624)		Mounting kit 3	2015625
Plug connectors and cables				
	Head A: Flying leads Head B: Flying leads Cable: PVC, shielded Fitting for EFI connections		EFI connecting cable	6029448
	Head A: male connector, M8, 4-pin, straight Head B: male connector, USB-A, straight Cable: PVC, unshielded, 2 m		DSL-8U04G02M025KM1	6034574
	Head A: male connector, M8, 4-pin, straight Head B: male connector, USB-A, straight Cable: PVC, unshielded, 10 m		DSL-8U04G10M025KM1	6034575
	Head A: system plug Cable: without cable Not for use of incremental encoders, integrated configuration storage		SX0A-A0000B	2023797
	Head A: system plug Cable: pre-assembled, Not for use of incremental encoders, integrated configuration storage, PVC, unshielded, 5 m		SX0A-B0905B	2027170
	Head A: system plug Cable: Pre-assembled, cable connection at the rear, Not for use of incremental encoders, integrated configuration storage, PVC, unshielded, 5 m		SX0A-B0905G	2049222
	Head A: system plug Cable: pre-assembled, Not for use of incremental encoders, integrated configuration storage, PVC, unshielded, 10 m		SX0A-B0910B	2027171
	Head A: system plug Cable: pre-assembled, Not for use of incremental encoders, integrated configuration storage, PVC, unshielded, 20 m		SX0A-B0920B	2027814
Test and monitoring tools				
	For aligning the reference target and setting up the collision protection function		Test equipment for collision protection	2078657
	To test the function of the protective field in a narrow aisle		Test object with bracket	2019459
Flexi Soft				
		Safety controllers, Flexi Soft	FX3-CPU130002	1043784

	Brief description	Further accessories	Type	Part no.
			FX3-XTI084002	1044125

SICK AT A GLANCE

SICK is one of the leading manufacturers of intelligent sensors and sensor solutions for industrial applications. A unique range of products and services creates the perfect basis for controlling processes securely and efficiently, protecting individuals from accidents and preventing damage to the environment.

We have extensive experience in a wide range of industries and understand their processes and requirements. With intelligent sensors, we can deliver exactly what our customers need. In application centers in Europe, Asia and North America, system solutions are tested and optimized in accordance with customer specifications. All this makes us a reliable supplier and development partner.

Comprehensive services complete our offering: SICK LifeTime Services provide support throughout the machine life cycle and ensure safety and productivity.

For us, that is “Sensor Intelligence.”

WORLDWIDE PRESENCE:

Contacts and other locations –www.sick.com