Online data sheet



WLG12-P537

WLG

SWITCHING AUTOMATION LIGHT GRIDS

SICK
Sensor Intelligence.



Illustration may differ

Ordering information

Type	Part no.
WLG12-P537	1015798

Other models and accessories → www.sick.com/WLG

Detailed technical data

Features

Minimum detectable object (MDO)	Parallel beam, 6 mm ... 12.5 mm
Beam separation	12.5 mm
Number of beams	8
Detection height	87.5 mm
Resolution (adjustable)	6 mm ... 12.5 mm [1]

[1] Dependence of the range.

Mechanics/electronics

Housing design (light emission)	Small
Wave length	650 nm
Supply voltage V_S	DC 18 V ... 30 V [1]
Power consumption sender	80 mA
Ripple	< 5 V_{pp}
Output current $I_{max.}$	≤ 100 mA
Output load capacitive	100 nF
Output load inductive	1 H
Initialization time	0.6 s
Dimensions (W x H x D)	62 mm x 106 mm x 46.6 mm
Connection type	Male connector M12, 5-pin
Housing material	Plastic
Indication	LED
Enclosure rating	IP67
Circuit protection	U_V connections, reverse polarity protected, Output Q short-circuit protected, Interference pulse suppression

[1] Typical value.
[2] Q = active, if at least one beam is interrupted, /Q = active, if all of the beams are free.

Protection class	II
Weight	230 g
Front screen	PMMA
Output mode	Q dark switching [2]
Teach-in input	PNP

[1] Typical value.
[2] Q = active, if at least one beam is interrupted, /Q = active, if all of the beams are free.

Performance

Maximum range	1.5 m
Minimum range	≥ 100 mm
Operating range	1.5 m
Response time	Parallel beam, 0.6 ms [1]

[1] With resistive load.

Interfaces

Switching output	2 x PNP [1]

[1] Q / $\bar{Q}$.

Ambient data

EMC	EN 60947-5-2
Ambient operating temperature	–25 °C +55 °C
Ambient storage temperature	–20 °C +70 °C
Vibration resistance	5 g, 10 Hz ... 55 Hz (IEC 68-2-6)
Shock load	10 g / DIN EN 60068-2-29 / 16 ms

Classifications

ECl@ss 5.0	27270910
ECl@ss 5.1.4	27270910
ECl@ss 6.0	27270910
ECl@ss 6.2	27270910
ECl@ss 7.0	27270910
ECl@ss 8.0	27270910
ECl@ss 8.1	27270910
ECl@ss 9.0	27270910
ETIM 5.0	EC002549
ETIM 6.0	EC002549
UNSPSC 16.0901	39121528

Dimensional drawing (Dimensions in mm (inch))

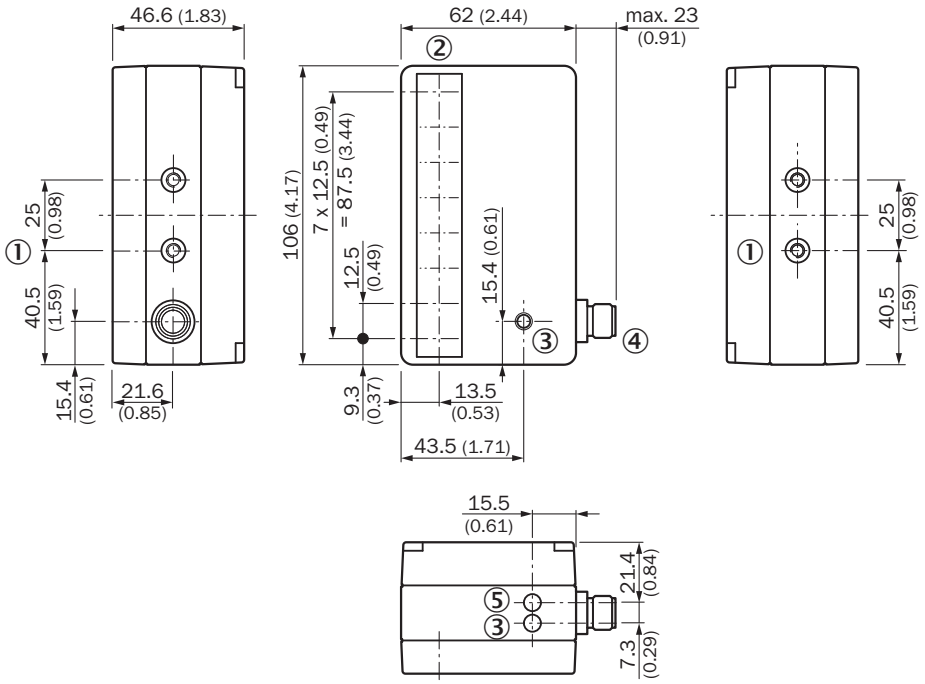

① M5 threaded mounting hole, 6 mm deep
② Optic
③ Multifunctional display front and top: receive indicator, output weak signal, error during teach-in
④ M12 male connector, 5-pin or 2 m cable
⑤ Operating indicator

Adjustments

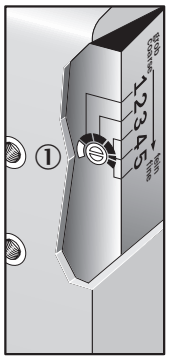

Choice of sensitivity range, dimensions in mm/m (inch)

Potentiometer setting	Resolution	Working range	Reflector
1	> 12.5 mm (0.49)	1.5 m (59.06)	2 x PL80A/PL40A
2	> 10 mm (0.39)	1.2 m (47.24)	2 x PL80A/PL40A
3	> 9 mm (0.35)	1.0 m (39.37)	PL180E01
4	> 7 mm (0.28)	0.8 m (31.50)	PL180E01
5	> 6 mm (0.24)	0.4 m (15.75)	PL180E01

① Potentiometer for sensitivity adjustment

Connection type and diagram

Connection type and diagram

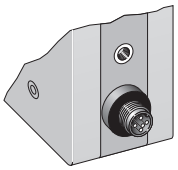

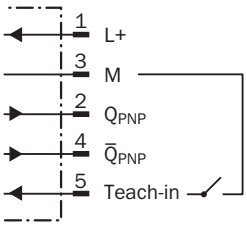

Recommended accessories

Other models and accessories ➜ www.sick.com/WLG

	Brief description	Type	Part no.
Mounting brackets and plates			
	Mounting bracket, steel, zinc coated, mounting hardware included	BEF-WN-WLG12	2017567
Plug connectors and cables			
	Head A: female connector, M12, 5-pin, angled, A-coded Head B: Flying leads Cable: Sensor/actuator cable, PVC, unshielded, 5 m	YG2A15-050VB5XLEAX	2096216
	Head A: male connector, M12, 5-pin, straight Cable: unshielded For field bus technology	STE-1205-G	6022083
Reflectors			
	Reflector, rectangular, screw connection, 175 mm x 34 mm, PMMA/ABS, Screw-on, 2 hole mounting	PL180E01	1013289

SICK AT A GLANCE

SICK is one of the leading manufacturers of intelligent sensors and sensor solutions for industrial applications. A unique range of products and services creates the perfect basis for controlling processes securely and efficiently, protecting individuals from accidents and preventing damage to the environment.

We have extensive experience in a wide range of industries and understand their processes and requirements. With intelligent sensors, we can deliver exactly what our customers need. In application centers in Europe, Asia and North America, system solutions are tested and optimized in accordance with customer specifications. All this makes us a reliable supplier and development partner.

Comprehensive services complete our offering: SICK LifeTime Services provide support throughout the machine life cycle and ensure safety and productivity.

For us, that is “Sensor Intelligence.”

WORLDWIDE PRESENCE:

Contacts and other locations –www.sick.com