Online data sheet



IRT-P211E40

ZoneControl

MULTITASK PHOTOELECTRIC SENSORS

SICK
Sensor Intelligence.



Illustration may differ

Ordering information

Type	Part no.
IRT-P211E40	1063103

Other models and accessories → www.sick.com/ZoneControl

Detailed technical data

Features

Actuator	Pneumatic, valve on board
Max. number of sensors	Approx. 30 [1] Approx. 50 [2]
Logical principle of operation	Single accumulation
Type of Release	Single release, block (slug) release
Sensor/ detection principle	Photoelectric proximity sensor, Background suppression
Dimensions (W x H x D)	50 mm x 147.4 mm x 48.9 mm
Sensing range max.	60 mm ... 900 mm
Sensing range	60 mm ... 900 mm
Type of light	Infrared light
Light source	LED [3]
Light spot size (distance)	Ø 20 mm (500 mm)
Angle of dispersion	7 °
Adjustment	Potentiometer, 9 turns
Special applications	ZoneControl

[1] When powerd from the end of the IR daisy chain.
[2] When powerd from center of the IR daisy chain.
[3] Average service life: 100,000 h at T_U = +25 °C.

Mechanics/electronics

Supply voltage	19.2 V DC ... 27.6 V DC [1]
Ripple	< 5 V_{pp} [2]
Power consumption	20 mA [3]
Switching output	PNP
Signal voltage PNP HIGH/LOW	Approx. V_S – 0.5 V / 0 V
Output current $I_{max.}$	≤ 100 mA
Response time	2 ms
Switching frequency	250 Hz
Connection type	Male connector M12, 4-pin
Connection type for daisy chain	Cable with receptacle, M12, 4-pin 1.2 m
Circuit protection	A [4] C [5] D [6]
Protection class	III
Weight	175 g
Housing material	Plastic, ABS
Enclosure rating	IP65
Shock and vibration resistance	According to IEC 68
Ambient operating temperature	–10 °C ... +55 °C
Ambient storage temperature	–40 °C ... +75 °C
UL File No.	NRKH.E189383 & NRKH7.E189383
Medium for valves	Compressed air or neutral gases filtered, non-lubricated or lubricated
Design solenoid valve	3/2-way valve
Mode of operation solenoid valve	Air to Drive (NC)
Connection type solenoid valve	Compressed air 2 x 8 mm diameter, control line 8 mm diameter
Coil ratings	24 V DC 2 W
Air flow rate	Approx. 20 Nl/min
Ventilation capacity	Approx. 130 Nl/min
Operating pressure range	2 bar ... 8 bar

[1] Limit values.
[2] May not exceed or fall below U_V tolerances.
[3] Without load and valve deenergized.
[4] A = V_S connections reverse-polarity protected.
[5] C = interference suppression.
[6] D = outputs overcurrent and short-circuit protected.

Safety-related parameters

$MTTF_D$	1,227 years
DC_{avg}	0%

Pneumatic

Coil ratings	24 V DC 2 W
Medium for valves	Compressed air or neutral gases filtered, non-lubricated or lubricated

Design solenoid valve	3/2-way valve
Connection type solenoid valve	Compressed air 2 x 8 mm diameter, control line 8 mm diameter
Air flow rate	Approx. 20 Nl/min
Ventilation capacity	Approx. 130 Nl/min
Operating pressure range	2 bar ... 8 bar

Classifications

ECl@ss 5.0	27270904
ECl@ss 5.1.4	27270904
ECl@ss 6.0	27270904
ECl@ss 6.2	27270904
ECl@ss 7.0	27270904
ECl@ss 8.0	27270904
ECl@ss 8.1	27270904
ECl@ss 9.0	27270904
ETIM 5.0	EC002719
ETIM 6.0	EC002719
UNSPSC 16.0901	39121528

Connection diagram

Cd-264

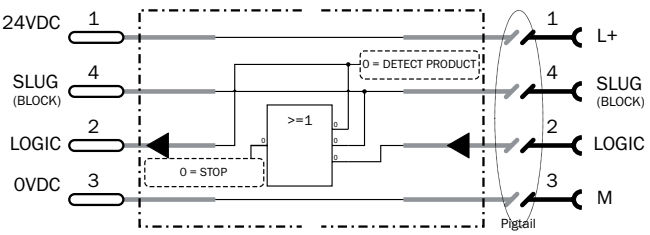

Characteristic curve

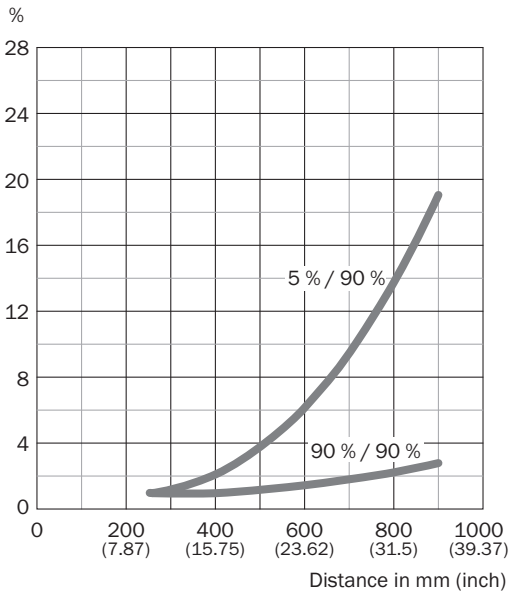

Light spot size

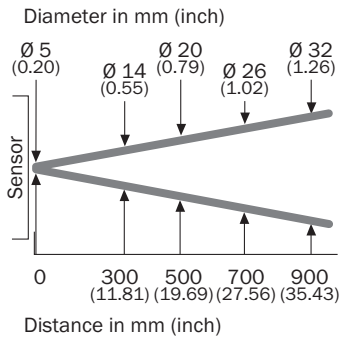

Sensing range diagram

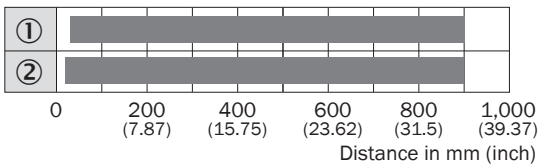

Sensing range max.

① Sensing range on black, 5 % remission
② Sensing range on white, 90% remission

Dimensional drawing (Dimensions in mm (inch))

IR, valve metric/imperial

Valve	A	B	C	D	E	F
A1x	46.7 (1.84)	18 (0.71)	24.6 (0.97)	59.9 (2.36)	31.7 (1.25)	151.9 (5.98)
E3x	30.2 (1.19)	22 (0.87)	24.6 (0.97)	49.9 (1.96)	22.2 (0.87)	135.4 (5.33)
E4x	42.2 (1.66)	18 (0.71)	24.7 (0.97)	50 (1.97)	34.2 (1.35)	147.4 (5.80)
E5x	21.5 (0.85)	22 (0.87)	28.7 (1.13)	50 (1.97)	15.1 (0.59)	125.3 (4.93)

mm (inch)

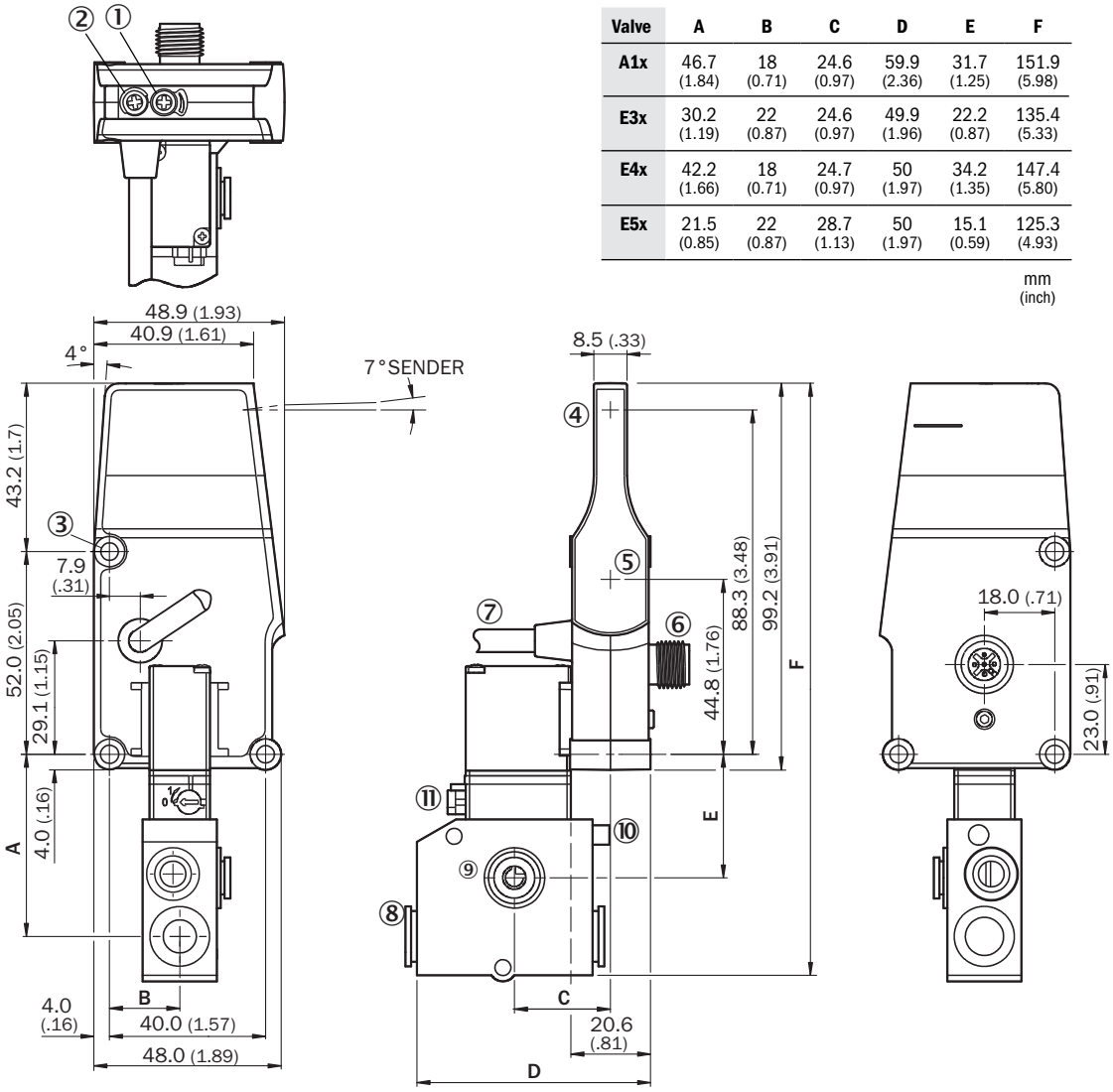

① Potentiometer
② LED
③ Fixing hole
④ Center of optical axis, sender
⑤ Center of optical axis, receiver
⑥ Male connector M12, 4-pin
⑦ Series connection, cable with female connector

Recommended accessories

Other models and accessories ➜ www.sick.com/ZoneControl

	Brief description	Type	Part no.
Mounting brackets and plates			
	Mounting bracket, steel, zinc coated, mounting hardware included	BEF-WK-WTR	2051786
		BEF-WN-IR	2074621
Plug connectors and cables			
	Head A: female connector, M12, 4-pin, straight, A-coded Head B: Flying leads Cable: Sensor/actuator cable, PVC, unshielded, 5 m	YF2A14-050VB3XLEAX	2096235
	Head A: male connector, M12, 4-pin, straight Head B: - Cable: unshielded	STE-1204-G	6009932

SICK AT A GLANCE

SICK is one of the leading manufacturers of intelligent sensors and sensor solutions for industrial applications. A unique range of products and services creates the perfect basis for controlling processes securely and efficiently, protecting individuals from accidents and preventing damage to the environment.

We have extensive experience in a wide range of industries and understand their processes and requirements. With intelligent sensors, we can deliver exactly what our customers need. In application centers in Europe, Asia and North America, system solutions are tested and optimized in accordance with customer specifications. All this makes us a reliable supplier and development partner.

Comprehensive services complete our offering: SICK LifeTime Services provide support throughout the machine life cycle and ensure safety and productivity.

For us, that is “Sensor Intelligence.”

WORLDWIDE PRESENCE:

Contacts and other locations –www.sick.com