Online data sheet



WTB9L-3P2491

W9

SMALL PHOTOELECTRIC SENSORS

SICK
Sensor Intelligence.



Illustration may differ

Ordering information

Type	Part no.
WTB9L-3P2491	1058151

Other models and accessories → www.sick.com/W9

Detailed technical data

Features

Sensor/ detection principle	Photoelectric proximity sensor, Background suppression
Dimensions (W x H x D)	12.2 mm x 52.2 mm x 23.6 mm
Housing design (light emission)	Rectangular
Mounting hole	M3
Sensing range max.	25 mm ... 400 mm [1]
Sensing range	25 mm ... 400 mm [1]
Type of light	Visible red light
Light source	Laser [2]
Light spot size (distance)	Ø 0.9 mm (230 mm)
Wave length	650 nm
Laser class	2 (IEC 60825-1 / CDRH 21 CFR 1040.10 & 1040.11)
Adjustment	Potentiometer, 5 turns
Special applications	Detecting small objects

[1] Object with 90 % reflectance (referred to standard white, DIN 5033).
[2] Average service life: 50,000 h at T_U = +25 °C.

Mechanics/electronics

Supply voltage	10 V DC ... 30 V DC [1]
Ripple	< 5 V_{pp} [2]
Power consumption	30 mA [3]
Switching output	PNP [4]
Output function	Complementary
Switching mode	Light/dark switching [4]
Output current $I_{max.}$	≤ 100 mA
Response time	≤ 1 ms [5]
Switching frequency	500 Hz [6]
Connection type	Male connector M12, 4-pin
Circuit protection	A [7] B [8] C [9]
Protection class	III
Weight	13 g
Housing material	Plastic, VISTAL®
Optics material	Plastic, PMMA
Enclosure rating	IP66 IP67 IP69K
Ambient operating temperature	–10 °C ... +50 °C
Ambient operating temperature extended	–30 °C ... +55 °C [10] [11]
Ambient storage temperature	–30 °C ... +70 °C
UL File No.	NRKH.E181493

[1] Limit values when operated in short-circuit protected network: max. 8 A.

[2] May not exceed or fall below U_V tolerances.

[3] Without load.

[4] Q = light switching.

[5] Signal transit time with resistive load.

[6] With light/dark ratio 1:1.

[7] A = V_S connections reverse-polarity protected.

[8] B = inputs and output reverse-polarity protected.

[9] C = interference suppression.

[10] As of T_a = 50 °C, a max. supply voltage $V_{max.}$ = 24 V and a max. load current $I_{max.}$ = 50 mA is permitted.

[11] Operation below Tu –10 °C is possible if the sensor is already switched on at Tu > –10 °C, then cools down, and the supply voltage is subsequently not switched off. Switching on below Tu –10 °C is not permissible.

Safety-related parameters

$MTTF_D$	424 years (EN ISO 13849-1) [1]
DC_{avg}	0%

[1] Mode of calculation: Parts-Count-calculation.

Classifications

ECl@ss 5.0	27270904
ECl@ss 5.1.4	27270904

ECl@ss 6.0	27270904
ECl@ss 6.2	27270904
ECl@ss 7.0	27270904
ECl@ss 8.0	27270904
ECl@ss 8.1	27270904
ECl@ss 9.0	27270904
ETIM 5.0	EC002719
ETIM 6.0	EC002719
UNSPSC 16.0901	39121528

Connection diagram

Cd-083

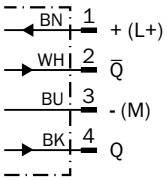

Characteristic curve

WTB9L-3, laser class 2

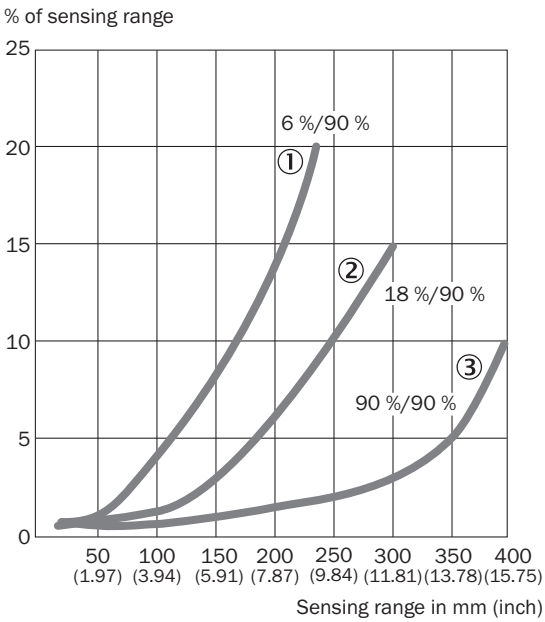

① Sensing range on black, 6% remission
② Sensing range on gray, 18 % remission
③ Sensing range on white, 90% remission

Light spot size

WTB9L-3, laser class 2

Radius in mm (inch)

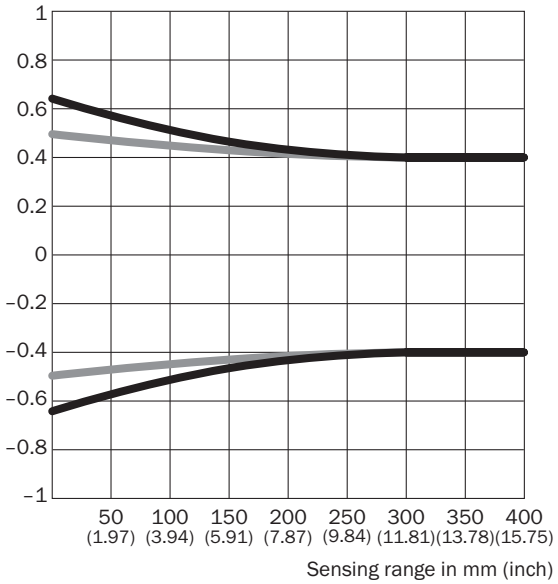

Dimensions in mm (inch)

Sensing range	Vertical	Horizontal
50 mm (1.97)	1.2 (0.05)	1.0 (0.04)
100 mm (3.94)	1.1 (0.04)	1.0 (0.04)
200 mm (7.87)	0.9 (0.04)	0.9 (0.04)
400 mm (15.75)	0.8 (0.03)	0.8 (0.03)

Sensing range diagram

WTB9L-3, laser class 2

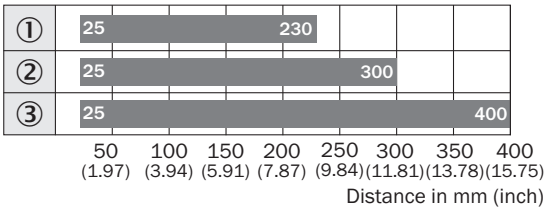

Sensing range typ. max.

① Sensing range on black, 6% remission
② Sensing range on gray, 18 % remission
③ Sensing range on white, 90% remission

Adjustments possible

Potentiometer

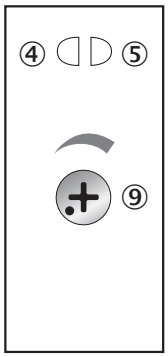

④ LED indicator yellow: Status of received light beam
⑤ LED indicator green: power on
⑨ Adjustment of sensing range

Dimensional drawing (Dimensions in mm (inch))

WTB9L-3

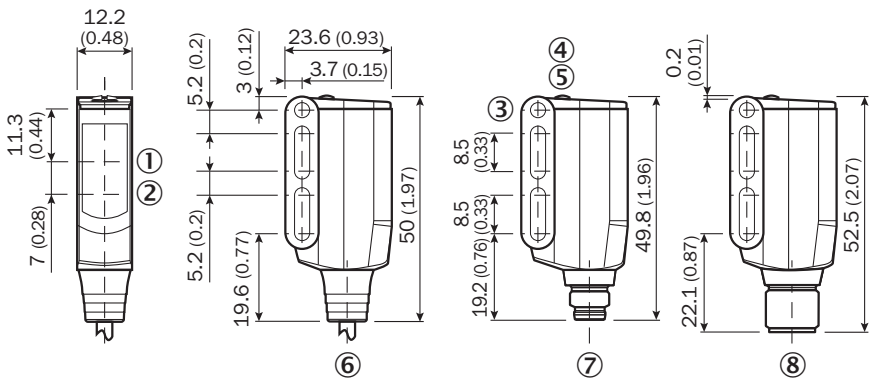

① Center of optical axis, receiver
② Center of optical axis, sender
③ Mounting hole M3 (Ø 3.1 mm)
④ LED indicator yellow: Status of received light beam
⑤ LED indicator green: power on
⑥ Connecting cable or connecting cable with connector
⑦ Male connector M8, 4-pin
⑧ Male connector M12, 4-pin

Recommended accessories

Other models and accessories ➜ www.sick.com/W9

	Brief description	Type	Part no.
Mounting brackets and plates			
	Mounting bracket, steel, zinc coated, mounting hardware included	BEF-WN-W9-2	2022855

	Brief description	Type	Part no.
Plug connectors and cables			
	Head A: female connector, M12, 4-pin, straight, A-coded Head B: Flying leads Cable: Sensor/actuator cable, PVC, unshielded, 5 m	YF2A14-050VB3XLEAX	2096235
	Head A: male connector, M12, 4-pin, straight Head B: - Cable: unshielded	STE-1204-G	6009932

SICK AT A GLANCE

SICK is one of the leading manufacturers of intelligent sensors and sensor solutions for industrial applications. A unique range of products and services creates the perfect basis for controlling processes securely and efficiently, protecting individuals from accidents and preventing damage to the environment.

We have extensive experience in a wide range of industries and understand their processes and requirements. With intelligent sensors, we can deliver exactly what our customers need. In application centers in Europe, Asia and North America, system solutions are tested and optimized in accordance with customer specifications. All this makes us a reliable supplier and development partner.

Comprehensive services complete our offering: SICK LifeTime Services provide support throughout the machine life cycle and ensure safety and productivity.

For us, that is “Sensor Intelligence.”

WORLDWIDE PRESENCE:

Contacts and other locations –www.sick.com