Online data sheet



NAV310-3211

NAV3xx

2D LIDAR SENSORS

SICK
Sensor Intelligence.



Ordering information

Type	Part no.
NAV310-3211	1060834

Other models and accessories ➜ www.sick.com/NAV3xx

Detailed technical data

Features

Application	Indoor
Light source	905 nm
Laser class	1 (IEC 60825-1:2014, EN 60825-1:2014)
Aperture angle	
Horizontal	360°
Scanning frequency	5 Hz ... 20 Hz
Angular resolution	0.125°, 1.875°, 0.25°, 0.375°, 0.5°, 0.75°, 1°, interlaced: 0.0625 °
Working range	0.5 m ... 250 m
Scanning range	
At 10% remission	35 m
At 90% remission	120 m

Mechanics/electronics

Electrical connection	3 x M12 male connector/female connector
Supply voltage	24 V DC, ± 15 %
Power consumption	36 W
Housing	Aluminum die cast
Housing color	Light blue (RAL 5012)
Enclosure rating	IP65
Protection class	III
Weight	2.4 kg
Dimensions (L x W x H)	115 mm x 120.5 mm x 222 mm

Performance

Detectable object shape	Almost any
Systematic error	± 10 mm [1)]

[1)] Actual value depends on environmental conditions.

Statistical error	15 mm [1]

[1] Actual value depends on environmental conditions.

Interfaces

Ethernet	✓, TCP/IP
Data transmission rate	100 Mbit/s
Serial	✓, RS-232
Data transmission rate	19.2 kBaud ... 115 kBaud
Digital outputs	1 (digital)
Optical indicators	4 LEDs (status displays)

Ambient data

Ambient operating temperature	0 °C ... +50 °C
Storage temperature	–20 °C ... +80 °C
Permissible relative humidity	85 %, Non-condensing

General notes

Note on use	The sensor does not constitute a safety component as defined by relevant legislation on machine safety.

Classifications

ECl@ss 5.0	27270990
ECl@ss 5.1.4	27270990
ECl@ss 6.0	27270913
ECl@ss 6.2	27270913
ECl@ss 7.0	27270913
ECl@ss 8.0	27270913
ECl@ss 8.1	27270913
ECl@ss 9.0	27270913
ETIM 5.0	EC002550
ETIM 6.0	EC002550
UNSPSC 16.0901	46171620

Dimensional drawing (Dimensions in mm (inch))

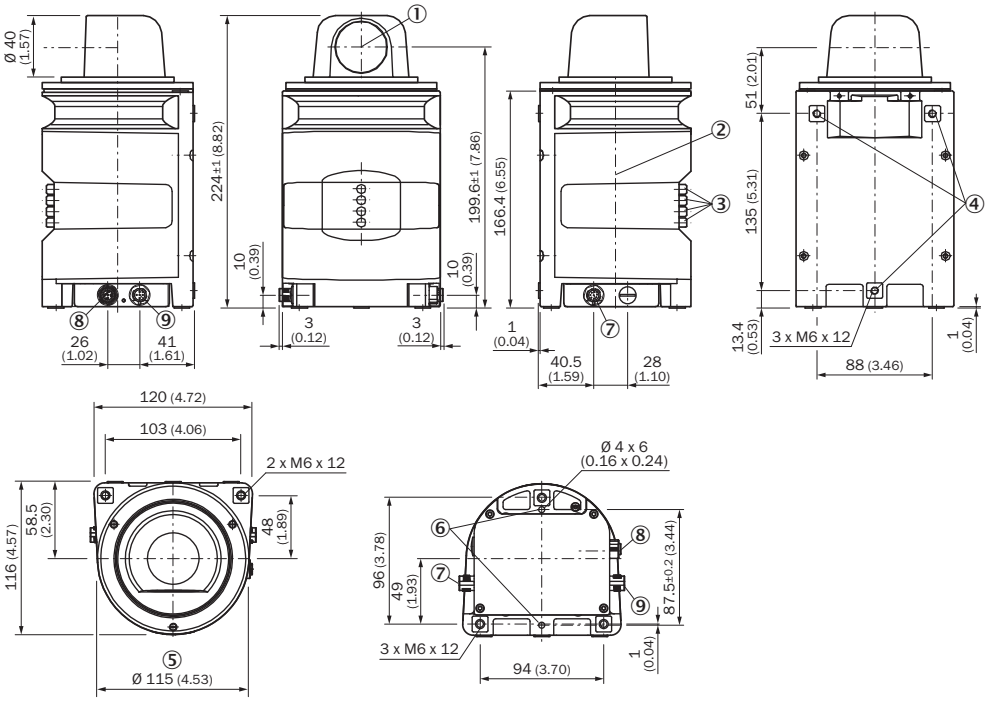

① Optical axis
② Zero level
③ LED (from top: yellow, yellow, green, red)
④ Mounting hole M6 x 12
⑤ Rotating diameter
⑥ Aligning pin
⑦ RS-232 connection (M12 x 8, male connector)
⑧ Ethernet connection (M12 x 4, female connector)
⑨ Power supply connection (M12 x 5. male connector)

Working range diagram

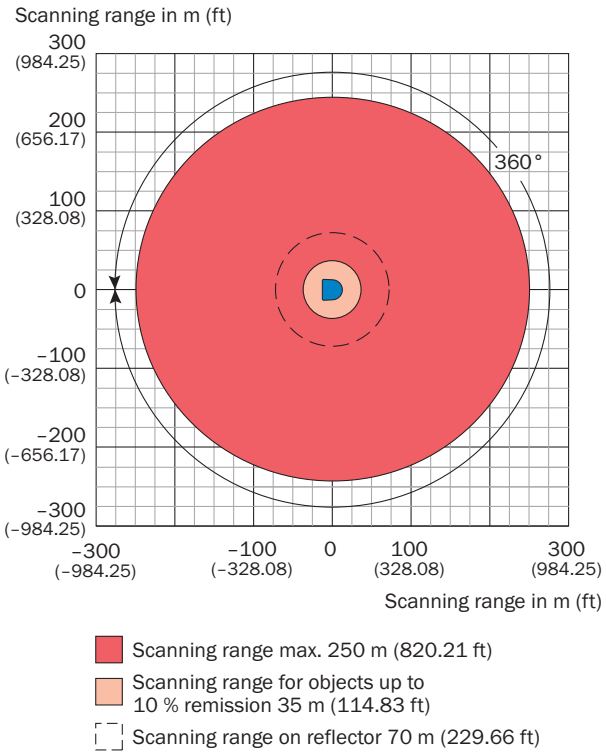

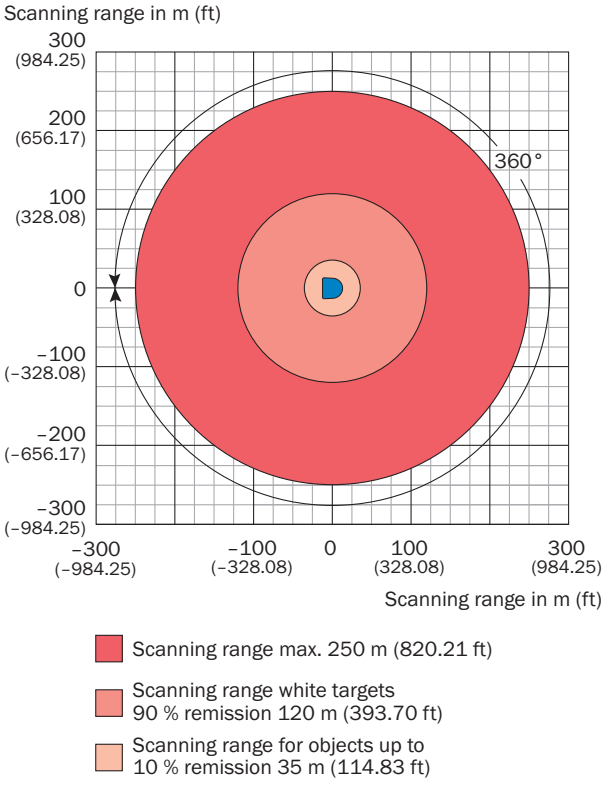

Recommended accessories

Other models and accessories ➜ www.sick.com/NAV3xx

	Brief description	Type	Part no.
Plug connectors and cables			
	Head A: female connector, M12, 8-pin, straight, A-coded Head B: Flying leads Cable: RS-232, RS-422, shielded, 5 m	Connecting cable (female connector - open)	6036153
	Head A: male connector, M12, 4-pin, straight, D-coded Head B: male connector, RJ45, 8-pin, straight Cable: Ethernet, twisted pair, PUR, halogen-free, shielded, 5 m	YM2D24-050EA1MRJA4	6034415
Reflectors			
	Reflective tape "Diamond Grade", self-adhesive, sheet, 749 mm x 914 mm, self-adhesive	REF-DG	5320565
Test and monitoring tools			
	Scan finder, receiver to localize infrared scans	Scan-Finder LS-80L	6020756

Recommended services

Additional services ➜ www.sick.com/NAV3xx

	Type	Part no.
Warranty extensions		
• **Product area:** Identification solutions, Vision, Distance sensors, Detection and ranging solutions • **Range of services:** The services correspond to the scope of the statutory manufacturer warranty (SICK general terms and conditions of purchase), Long-term protection for calculable lump sum. • **Duration:** Five-year warranty from date of purchase.	Five-year extended warranty	1680671
Training		
• **Product family group:** 2D LiDAR sensors, 3D LiDAR sensors • **Range of services:** The training format and location can be worked out in collaboration with SICK • **Note:** A minimum and maximum number of participants is determined based on the training format, depending on the training format, content and location, a training course may take place over the course of one or more work days • **Duration:** The fixed price includes the specific training services agreed upon with the customer, the fixed price includes the work time required for the training services, the required work time depends on the range of services, Additional work will be invoiced separately based on time spent • **Travel expenses:** The prices include costs for the travel time and expenses, travel costs, such as flight or hotel expenses, are not included	Training LMS/MRS/NAV/TiM	1612234

	Type	Part no.
Commissioning		
• **Product area:** 2D LiDAR sensors, 3D LiDAR sensors • **Range of services:** Inspection of connection, fine adjustment, configuration of monitored areas, configuration and optimization of parameters of the LMS/MRS/NAV/TiM as well as verification tests, Setup of previously defined functions of basic settings, parameters of field application, filters for raw data output and product-specific configuration • **Documentation:** Archiving of product parameters in a SICK database, Documentation of performance, Creation of a commissioning log • **Duration:** Additional work will be invoiced separately based on time spent • **Note:** The prices do not include expenses or costs for the travel time	Commissioning LMS/MRS/NAV/TiM (Prime package)	1680672
Maintenance		
• **Product area:** 2D LiDAR sensors, 3D LiDAR sensors • **Range of services:** Inspection, analysis and restoring of defined functions, Inspection and adaptation of basic settings, parameters of field application, filters for raw data output, and product-specific configuration • **Documentation:** Documentation of operating hours and archiving of parameters in a SICK database, Creation of a maintenance log • **Duration:** Additional work will be invoiced separately based on time spent • **Note:** The prices do not include expenses or costs for the travel time	Maintenance LMS/MRS/NAV/TiM	1682593

SICK AT A GLANCE

SICK is one of the leading manufacturers of intelligent sensors and sensor solutions for industrial applications. A unique range of products and services creates the perfect basis for controlling processes securely and efficiently, protecting individuals from accidents and preventing damage to the environment.

We have extensive experience in a wide range of industries and understand their processes and requirements. With intelligent sensors, we can deliver exactly what our customers need. In application centers in Europe, Asia and North America, system solutions are tested and optimized in accordance with customer specifications. All this makes us a reliable supplier and development partner.

Comprehensive services complete our offering: SICK LifeTime Services provide support throughout the machine life cycle and ensure safety and productivity.

For us, that is “Sensor Intelligence.”

WORLDWIDE PRESENCE:

Contacts and other locations –www.sick.com